# CCG1 40-QFN Type-C To DVI Reference Schematic

Table Of Contents


| Sheet | Description |
|---|---|
| 1 | Table of Contents |
| 2 | CCG1/USB Billboard |
| 3 | Type-C/Power |
| 4 | DP to DVI Convertor - MCDP2900 |


Revision History

| Revision | Date | Revision Summary |
|---|---|---|
| * | 05-20-2015 | Initial Release |
| | | |

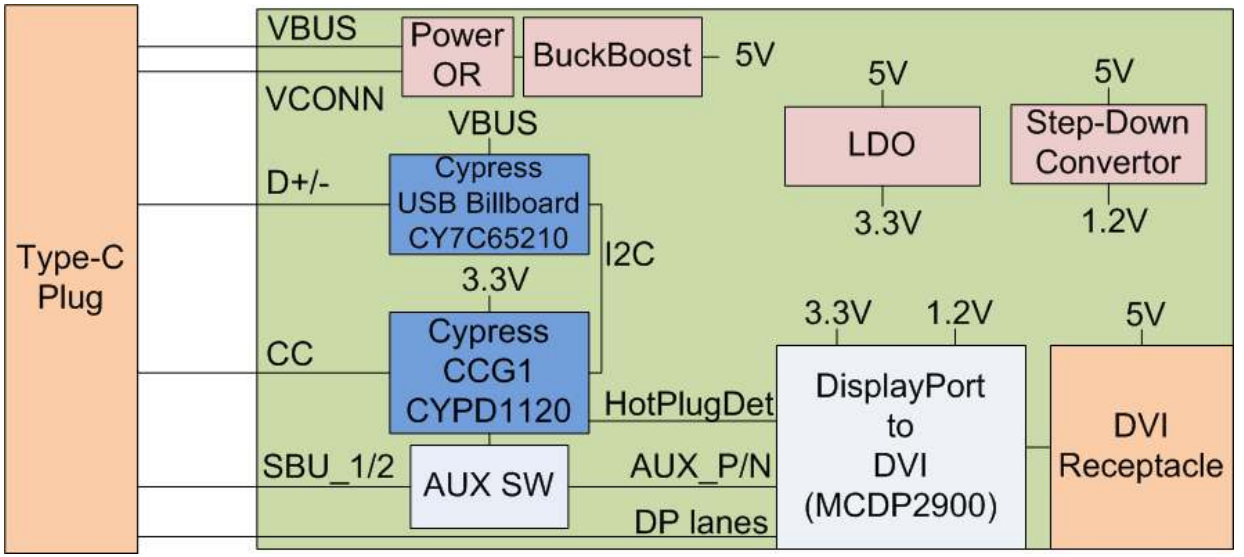


| | | |
|---|---|---|
| Title | CCG1 40-QFN Type-C To DVI Reference Schematic | |
| Size B | Document Number <Doc> | Rev * |
| Date: Wednesday, May 20, 2015 | Sheet 1 of 4 | |

# CCG1/USB Billboard

## CCG1 - Power Delivery Alternate Mode Controller

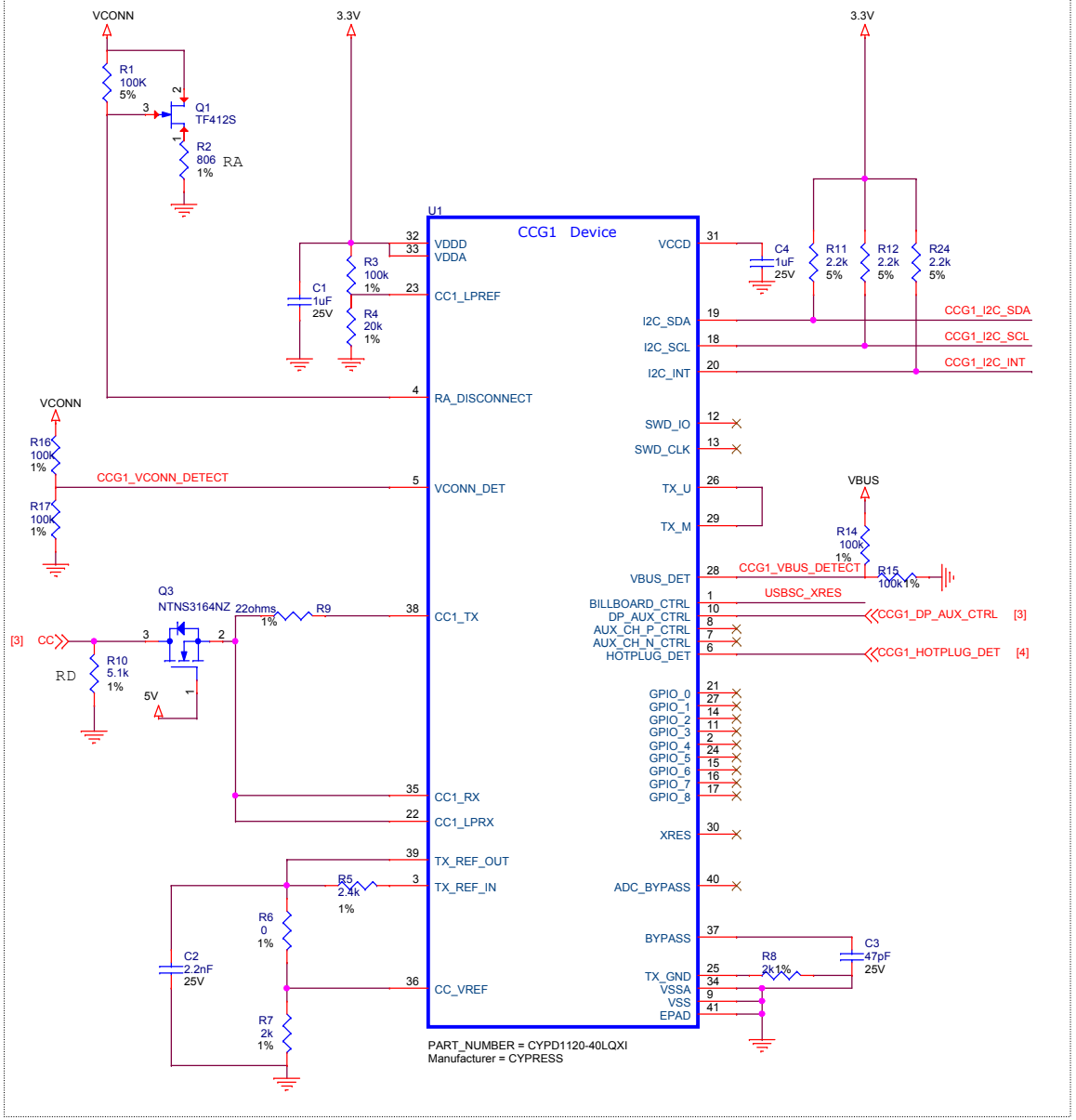


## Cypress - USB Billboard

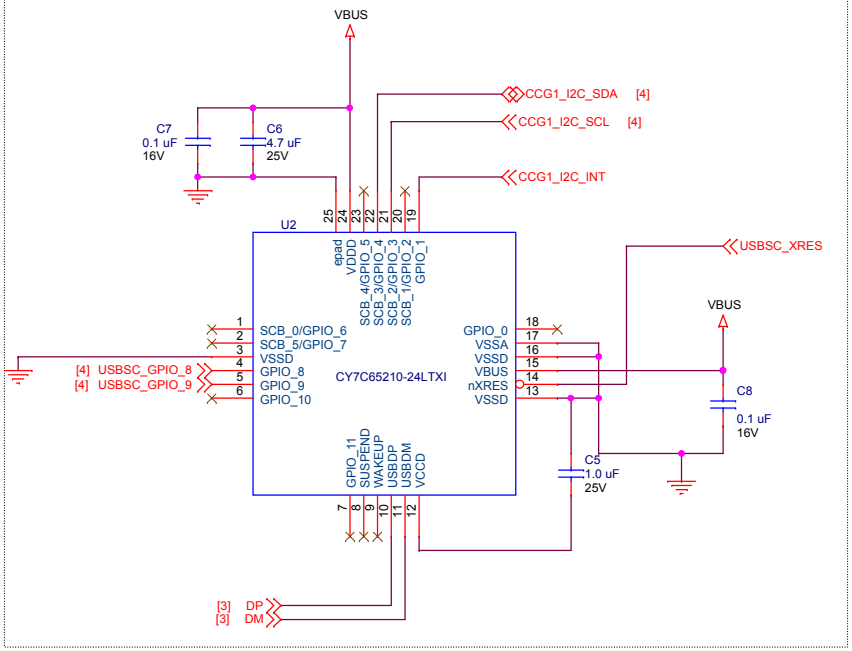


| | | | |
|---|---|---|---|
| Title | CCG1 40-QFN Type-C To DVI Reference Schematic | | |
| Size B | Document Number <Doc> | | Rev * |
| Date: Wednesday, May 20, 2015 | | Sheet 2 of 4 | |

# Type-C/Power

## Type-C

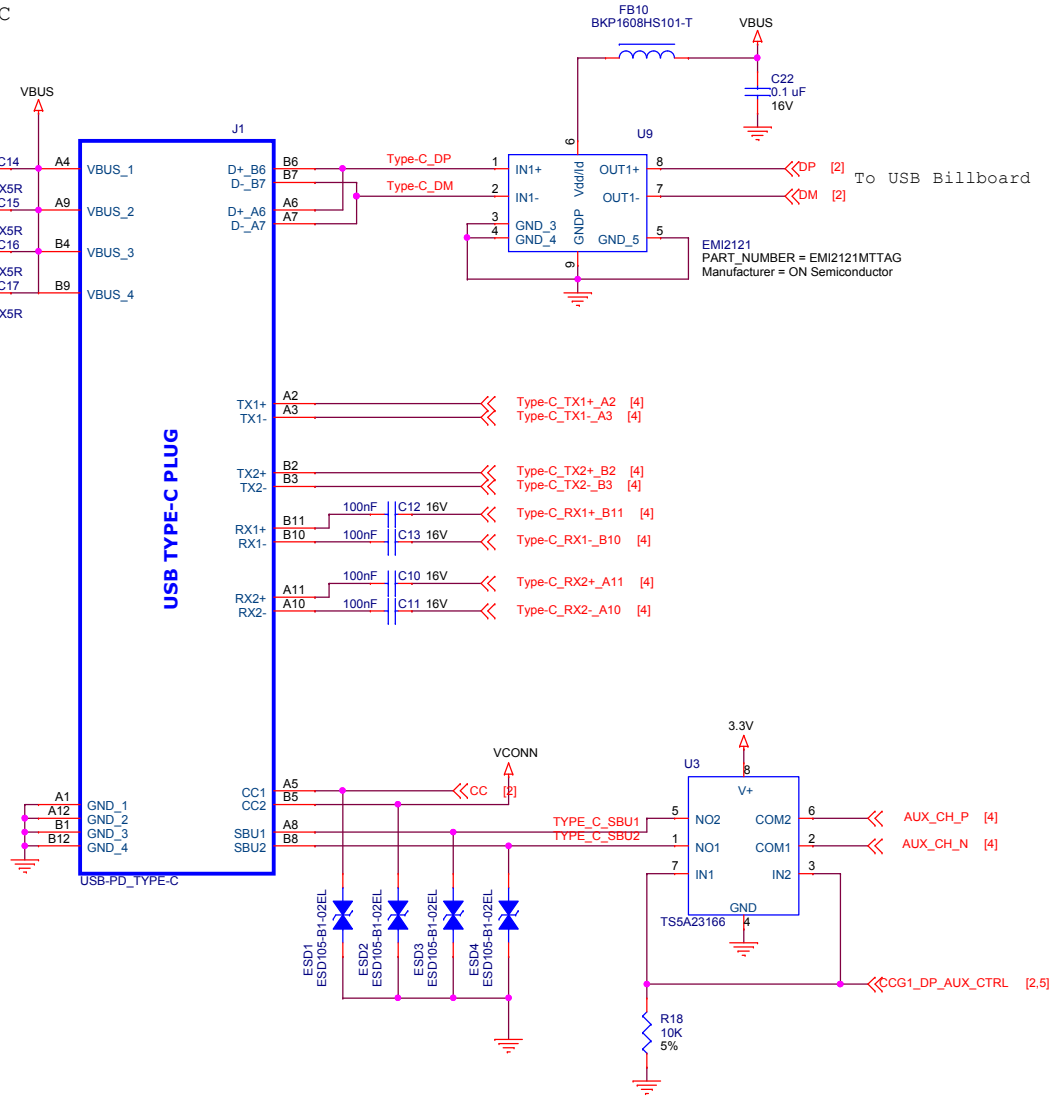


## VCONN or VBUS Power Option

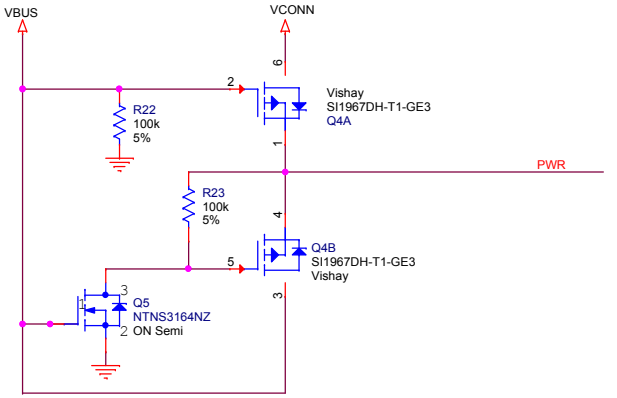


## Buck Boost Regulator - 5V

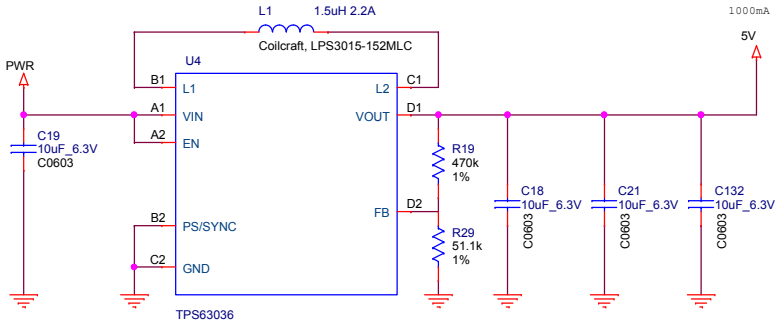


Note: Please refer to TPS63036 datasheet for layout considerations to avoid regulator stability problems and EMI problems.

## LDO Regulator - 3.3V

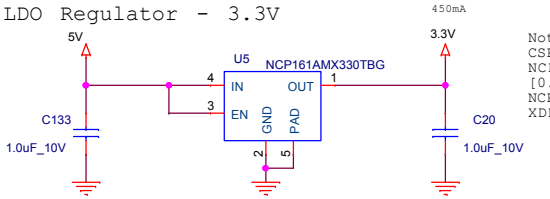


Note: NCP161 is available in CSP or DFN package
NCP161AFCT330T2G [0.65*0.65mm CSP4]
NCP161AMX330TBG [1*1mm XDFN4]

| | | |
|---|---|---|
| Title | CCG1 40-QFN Type-C To DVI Reference Schematic | |
| Size B | Document Number <Doc> | Rev * |
| Date: Wednesday, May 20, 2015 | Sheet 3 of 4 | |

# DP to DVI Convertor - MCDP2900

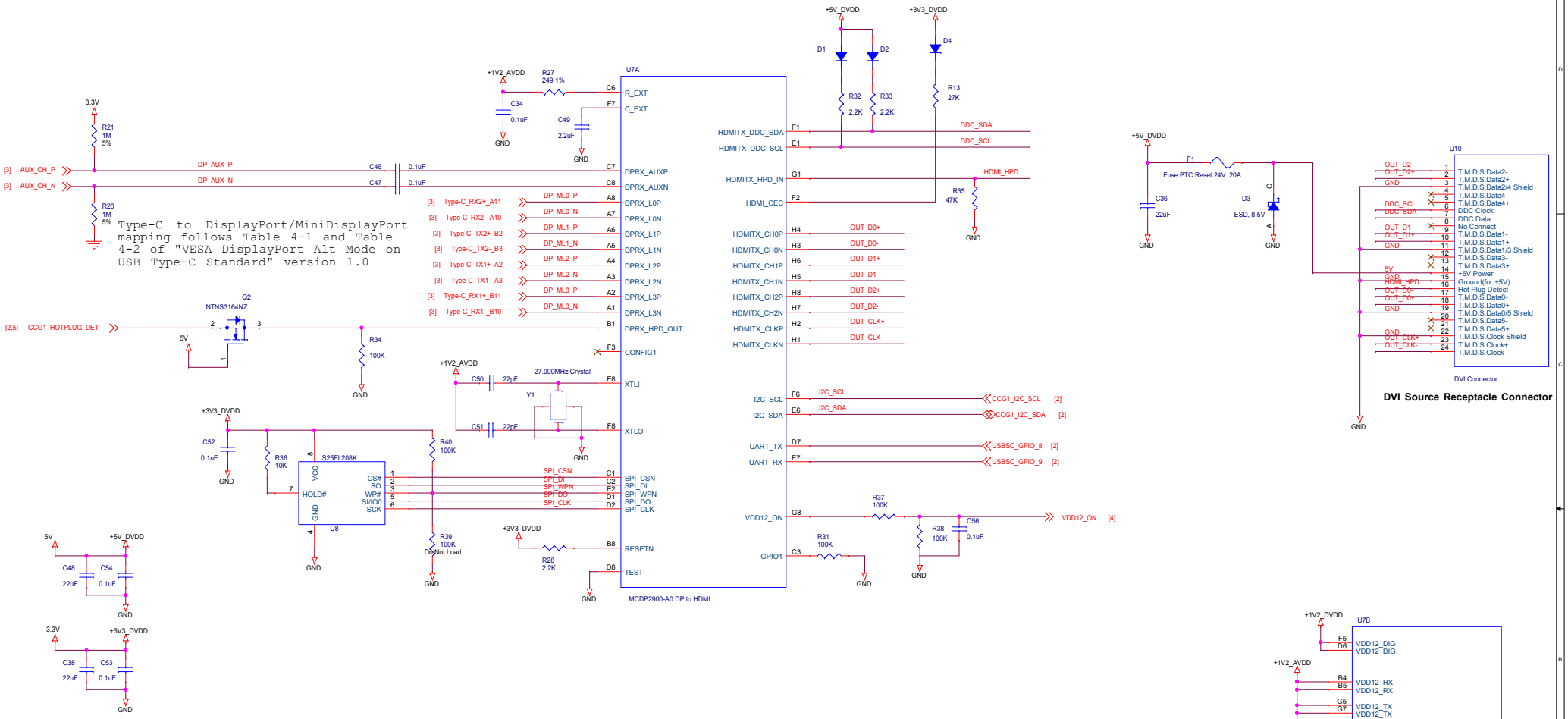





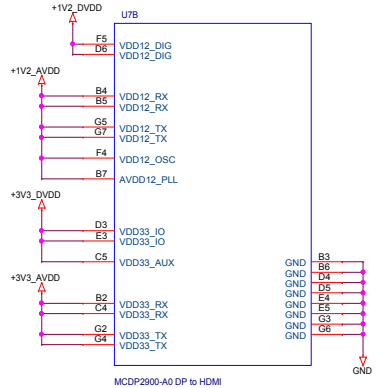


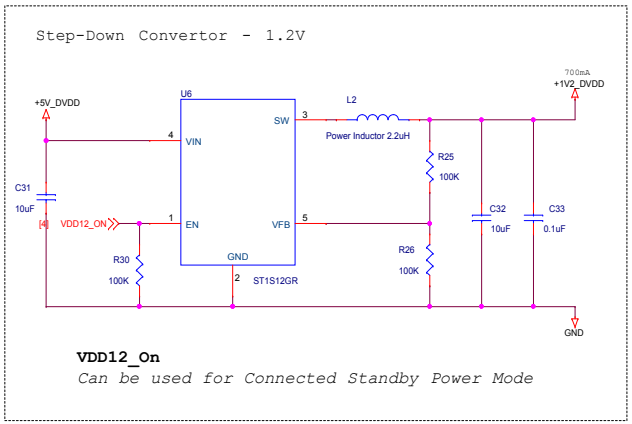


**VDD12_On**

*Can be used for Connected Standby Power Mode*

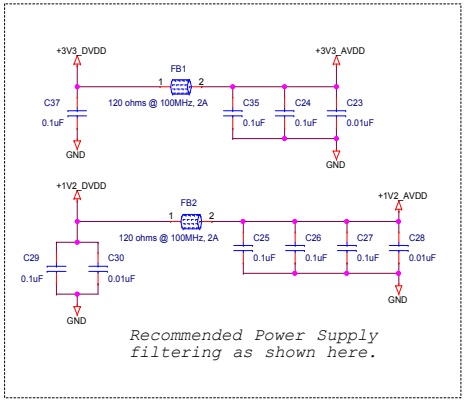


*Recommended Power Supply filtering as shown here.*

| | | | |
|---|---|---|---|
| Title | CCG1 40-QFN Type-C To DVI Reference Schematic | | |
| Size C | Document Number <Doc> | | Rev * |
| Date: Thursday, May 21, 2015 | | Sheet 4 of 4 | |